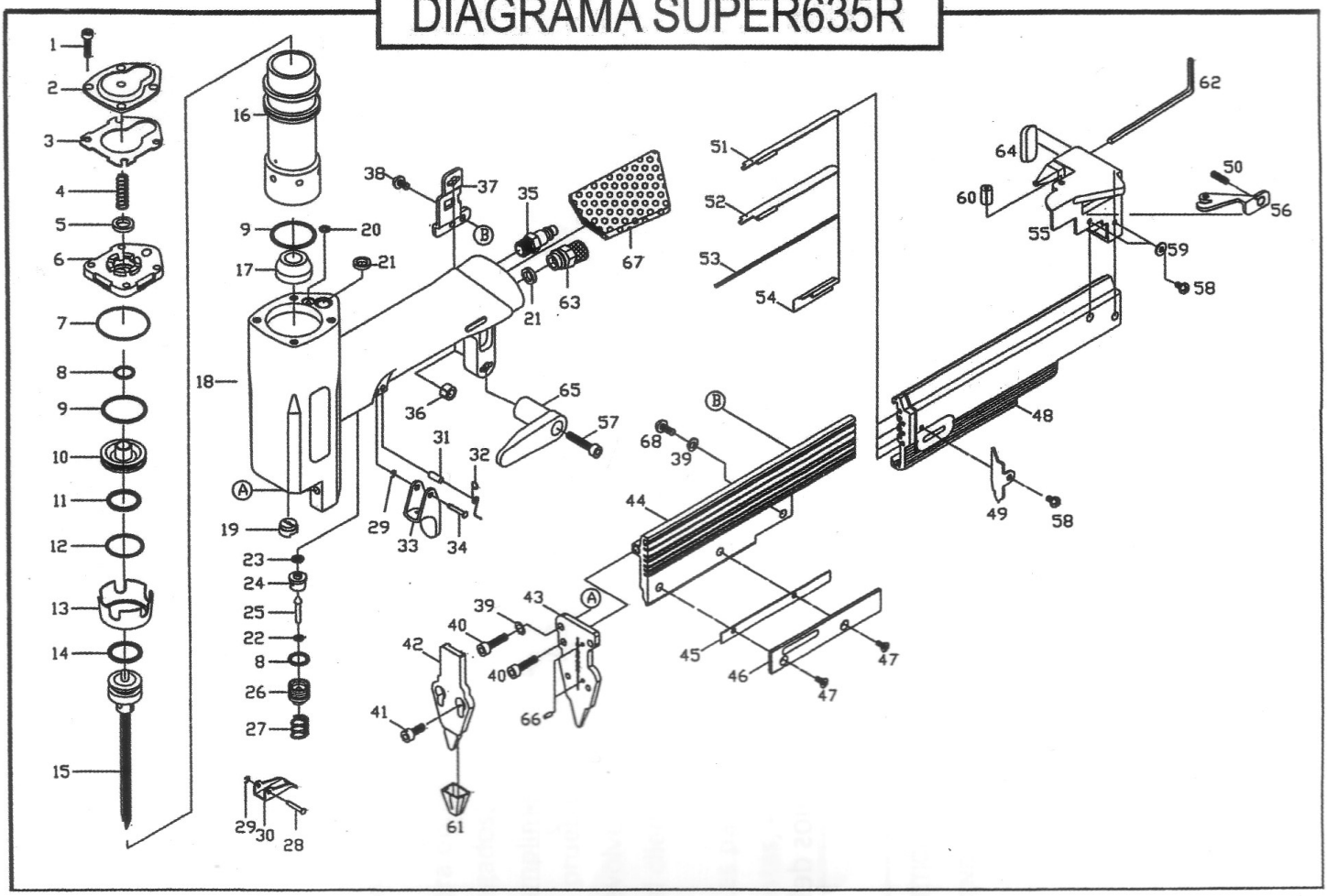DIAGRAMA SUPER635R